Mitsubishi Electric Programmable Controller Renewal Tool

Conversion Adapter

Model
ERNT-1Y2Q600

User's Manual

50CM-D180253-B(1611)

MITSUBISHI ELECTRIC ENGINEERING COMPANY LIMITED
HEAD OFFICE: Hulic KUDAN BLDG.1-13-5, KUDANKITA CHIYODA-KU, TOKYO 102-0073, JAPAN
NAGOYA ENGINEERING OFFICE:139 SHIMOYASHIKICHO-SHIMOYASHIKI, KASUGAI, AICHI 486-0906, JAPAN

● SAFETY PRECAUTIONS ●

(Always read these precautions prior to use.)

Before using this product, please read this manual carefully and pay full attention to safety to ensure that the product is used correctly.
The precautions presented in this manual are concerned with this product only. For Programmable Controller system safety precautions, refer to the user's manual of the MELSEC-Q Series CPU Module to be used.
In this manual, the safety precautions are ranked as "WARNING" and "CAUTION."

⚠WARNING	Indicates that incorrect handling may cause hazardous conditions, resulting in death or severe injury.
⚠CAUTION	Indicates that incorrect handling may cause hazardous conditions, resulting in medium or minor injury and/or property damage.

Note that failure to observe the ⚠ CAUTION level instructions may lead to a serious consequence according to the circumstances. Always follow the precautions of both levels because they are important to personal safety.
Please keep this manual in an easy-to-access location for future reference, and be sure to provide the manual to the end user.

[Precautions before using]

⚠ CAUTION

- When making a switch to the MELSEC-Q Series, be sure to consult user's manual supplied with individual module under the MELSEC-Q Series to confirm differences in various aspects including performance, function, CPU input/output signals between the two modules.

[Installation Precautions]

⚠ CAUTION

- Use the Conversion Adapter in the environmental conditions that are specified in the general specification. If the Products are used in any environment beyond the bounds of the general specification, electric shock, fire, malfunction, or damage to or degradation of the Products will result.
- Do not directly touch any conductive parts of Conversion Adapter. Contact will cause malfunction or failure in the system.
- Fasten the Conversion Adapter and the Mounting Bracket securely with retaining screws, and tighten the screws by applying torque within specified limits. Loose screws can lead to the dropping of the Conversion Adapter or Mounting Bracket, possibly causing breakage thereof. Excessive tightness of the screws can lead to breakage of the screws, Conversion Adapter, Mounting Bracket, or MELSEC-Q Series Module, possibly causing the dropping, shorting, and malfunction thereof.
- Always check for correct match between MELSEC-Q Series and the Conversion Adapter. Incorrect match can cause damage to the MELSEC-Q Series Module.
- When installing the Conversion Adapter, take care not to get your hand snagged on the Mounting Bracket or the like. Injury may result.
- When installing or removing the MELSEC-Q Series Module complete with a Converter Adapter, be sure to hold it with both hands. Dropping may lead to breakage.

[Wiring Precautions]

⚠ WARNING

- Before attempting to install the Unit or carry out the necessary wiring, make certain that the external power supply, used in the system, is shut off on all three phases. Failure to do so may result in electric shock or damage to the product.
- After installation and wiring, close the terminal block cover before turning on the module for operation. Failure to do so may result in electric shock.

⚠ CAUTION

- Carry out wiring for the Conversion Adapter correctly after checking the specification and terminal arrangement for the module used. Connecting a power supply with a different voltage rating or incorrect wiring may cause a fire or failure.
- Tighten the terminal installation screws and terminal screw securely by applying torque within the specified limits. Loose screws will cause short circuit, fire or malfunction. Excessive tightening will damage the screws or the Conversion Adapter which in turn will cause dropping of parts, short circuit or malfunction.
- Use care to prevent foreign materials including cuttings and wiring debris from entering the Conversion Adapter or the MELSEC-Q Series Module. These will be cause for fire, failure or malfunction.

[Startup and Maintenance Precautions]

⚠ WARNING

- Do not touch live terminals. There is a danger of electric shock or malfunction.
- Shut off the external power supply for the system in all phases before cleaning or retightening the terminal screws. Failure to do so may result in electric shock or cause the MELSEC-Q Series Module to fail or malfunction. Loose screws can lead to dropping, shorting, and malfunction. Excessive tightness of the screws can lead to breakage of the screws, Conversion Adapter, Mounting Bracket, or MELSEC-Q Series Module, possibly causing the dropping, shorting, and malfunction thereof.

⚠ CAUTION

- Do not modify the Conversion Adapter or take it apart. Doing so will cause failure, malfunction, personal injury, or fire.
- Do not drop the Conversion Adapter and Mounting Bracket or do not give a strong impact to it. This will cause damage.

[Disposal Precautions]

⚠ CAUTION

- When disposing of the product, treat it as industrial waste.

● 安全注意事项 ●

（使用前请务必阅读）

使用本产品时，请仔细阅读本手册，并充分注意安全，正确地使用产品。
本手册中标注的注意事项仅记载了与本产品相关的内容。关于可编程控制器系统的安全注意事项，请参阅所使用的MELSEC-Q系列CPU模块的用户手册。
在本●安全注意事项●中，安全注意事项的等级分为「警告」和「注意」。

⚠警告	表示错误操作可能造成危险后果，引起死亡或重伤事故。
⚠注意	表示错误操作可能造成危险后果，引起中度伤害，轻伤及财产损失。

另外，根据情况不同，即使是⚠注意中记载的事项，也可能引发严重后果。不管哪个记载的都是非常重要的内容，请务必遵守。
请妥善保管本手册，以便需要时取阅，并请将本手册交给最终用户。

【使用前的注意事项】

⚠ 注 意

- 替换至MELSEC-Q系列时，为确认性能，功能，CPU对应的输入输出信号等方面的差异，请务必参照MELSEC-Q系列的各模块的手册进行使用。

【安装注意事项】

⚠ 注 意

- 应在一般规格环境下使用转换适配器。如果在一般规格范围以外的环境中使用转换适配器，可能导致触电，火灾，误动作，产品损坏或性能劣化。
- 请不要直接触摸转换适配器的导电部分。否则可能会造成系统误动作，故障。
- 转换适配器及安装配件应通过安装螺钉切实地加以固定，安装螺钉应在规定的扭矩范围内切实地拧紧。如果螺钉拧得过松，有可能因掉落而导致转换适配器及安装配件破损。如果螺钉拧得过紧，有可能造成螺钉，转换适配器，安装配件及MELSEC-Q系列模块破损，从而导致掉落，短路或误动作。
- 请务必确认MELSEC-Q系列模块和转换适配器的组合是否正确。在错误组合下使用时，可能会导致MELSEC-Q系列模块损坏。
- 安装转换适配器时，应注意不要使手等身体部分刮到安装配件。否则可能会导致受伤。
- 在对安装了转换适配器的 MELSEC-Q 系列模块进行装卸时，请务必用双手拿住产品。否则会因落下而导致损坏。

【接线注意事项】

⚠ 警 告

- 在进行安装，配线作业等时，必须将系统使用的外部供应电源全部断开后再进行操作。如果未全部断开，有可能导致触电或产品损坏。
- 安装，配线作业完成之后进行通电，运行时，必须关闭端子排的端子排盖板。如果未关闭端子排盖板，有可能导致触电。

⚠ 注 意

- 请确认所使用模块的规格及端子排列后正确地进行转换适配器的接线。如果输入不符合额定值的电压，连接不符合额定值的电源或接错线，可能会导致火灾或故障。
- 端子排安装螺钉，端子螺钉应在规定的扭矩范围内切实地拧紧。如果螺钉拧得过松，有可能导致短路，火灾或误动作。如果螺钉拧得过紧，有可能造成螺钉及转换适配器破损从而导致掉落，短路或误动作。
- 请注意不要让切屑或接线头等异物进入转换适配器及MELSEC-Q系列模块内。否则可能会导致火灾，故障，误动作。

【启动和维护注意事项】

⚠ 警 告

- 在通电状态下请勿触摸端子。否则可能导致触电或误动作。
- 在清洁模块或重新紧固端子螺钉时，必须将系统使用的外部供应电源全部断开后再进行操作。如果未全部断开，有可能导致触电或MELSEC-Q系列模块故障，误动作。如果螺钉拧得过松，有可能导致掉落，短路或误动作。如果螺钉拧得过紧，有可能导致螺钉，转换适配器，安装配件及MELSEC-Q系列模块破损，从而导致掉落，短路或误动作。

⚠ 注 意

- 请不要拆卸，改造转换适配器。否则可能会导致故障，误动作，受伤或火灾。
- 请勿使转换适配器及安装配件掉落或受到强烈撞击。否则可能导致破损。

【废弃注意事项】

⚠ 注 意

- 废弃时请将本产品作为工业废弃物处理。

（产品名）Renewal Tool的基于
「电器电子产品有害物质限制使用标识要求」的表示方式

Note: This symbol mark is for China only.

含有有害6物质的名称，含有量，含有部品
本产品中所含有的有害6物质的名称，含有量，含有部品如下表所示。

产品中有害物质的名称及含量

部件名称	有害物质					
	铅（Pb）	汞（Hg）	镉（Cd）	六价铬（Cr(VI)）	多溴联苯（PBB）	多溴二苯醚（PBDE）
电路板组件（包括印刷电路板及其构成的零部件，如电阻、电容、集成电路、连接器等）	○	○	○	○	○	○
安装金属零件	○	○	○	○	○	○
外壳	×	○	○	○	○	○

本表格依据SJ/T 11364 的规定编制。
○:表示该有害物质在该部件所有均质材料中的含量均在GB/T 26572 规定的限量要求以下。
×:表示该有害物质至少在该部件的某一均质材料中的含量超出GB/T 26572 规定的限量要求。

EMC AND LOW VOLTAGE DIRECTIVES

Compliance to the EMC Directive, which is one of the EU Directives, has been a legal obligation for the products sold in European countries since 1996 as well as the Low Voltage Directive since 1997.
Manufacturers who recognize their products are compliant to the EMC and Low Voltage Directives are required to declare that print a "CE mark" on their products.

Authorized representative in Europe

Authorized representative in Europe is shown below.
Name: Mitsubishi Electric Europe B.V.
Address: Mitsubishi-Electric-Platz 1, 40882 Ratingen, Germany

1. Overview

This manual describes specifications, handling and other information about the Conversion Adapter "ERNT-1Y2Q600" available as Renewal Tools for the Mitsubishi Electric Programmable Controller.
Before attempting to make a switch to MELSEC-Q Series in your installation, consult the user's manual supplied with individual module under the latter series to learn about how they differ in various aspects including performance and function.

Once you have opened the packaging, verify that it contains the following products.

Product	Shape	Quantity
Conversion Adapter	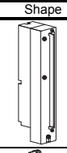	1
Mounting Bracket		1
Mounting Bracket fixing screws (M3.5 x 6)		2
This manual	–	1

2. General Specifications

Item	Specifications						
Operating ambient temperature	0 to 55℃(Maximum surrounding air temperature 55℃)						
Storage ambient temperature	-25 to 75℃						
Operating ambient humidity	5 to 95%RH, non-condensing						
Storage ambient humidity							
Vibration resistance	Compliant with JIS B 3502 and IEC 61131-2		Frequency	Constant acceleration	Half amplitude	Sweep count	
		Under intermittent vibration	5 to 8.4Hz	–	3.5mm	10 times each in X, Y, Z directions	
			8.4 to 150Hz	9.8m/s²	–		
		Under continuous vibration	5 to 8.4Hz	–	1.75mm	–	
			8.4 to 150Hz	4.9m/s²	–		
Shock resistance	Compliant with JIS B 3502 and IEC 61131-2 (147 m/s², 3 times each in 3 directions X, Y, Z)						
Operating atmosphere	No corrosive gases						
Operating altitude *1	0 to 2000m						
Installation location	Inside a control panel						
Overvoltage category *2	II or less						
Pollution degree *3	2						

*1 : Do not use or store under pressure higher than the atmospheric pressure of altitude 0m.
*2 : This indicates the section of the power supply to which the equipment is assumed to be connected between the public electrical power distribution network and the machinery within premises.
Category II applies to equipment for which electrical power is supplied from fixed facilities.
*3 : This index indicates the degree to which conductive material is generated in terms of the environment in which the equipment is used.
Pollution level 2 is when only non-conductive pollution occurs. A temporary conductivity caused by condensing must be expected occasionally.

3. Products Required by the Conversion Adapter

(1) Conversion Adapter Anchor Base (Sold Separately)
The Conversion Adapter Anchor Base secures the bottom of the Conversion Adapter. One anchor base is required per base unit.

Conversion Adapter Anchor Base Model	Specifications	Weight (g)
ERNT-AQF12	12-slot conversion adapter anchor base	590
ERNT-AQF8	8-slot conversion adapter anchor base	410
ERNT-AQF5	5-slot conversion adapter anchor base	275
ERNT-AQF3	3-slot conversion adapter anchor base	185

(2) Base Adapter (Sold Separately)
Both the MELSEC-Q Series Base Unit and the Conversion Adapter Anchor Base can be installed on the Base Adapter without drilling screw holes.
However, drilling screw holes (M5 screws) is required to install the Base Adapter to the panel surface.
For the Base Unit models marked with *1 to *5, two or more Base Adapter models are applicable. Select the most suitable Base Adapter according to the product dimensions.

Base Adapter Model	Installable						Product dimensions Width×Height (mm)	Weight (g)
	MELSEC-Q Series Base Unit					Conversion Adapter Anchor Base		
	12 slots	8 slots	5 slots	3 slots	2 slots			
ERNT-AQB38	Q312B					ERNT-AQF12, ERNT-AQF8	480×240	970
		Q38B(*1)				ERNT-AQF8		
ERNT-AQB35		Q38B(*1)				ERNT-AQF8, ERNT-AQF5	382×240	795
			Q35B			ERNT-AQF5		
ERNT-AQB32				Q33B		ERNT-AQF3	247×240	675
ERNT-AQB68	Q612B					ERNT-AQF12, ERNT-AQF8	466×240	930
		Q68B(*2)				ERNT-AQF8		
ERNT-AQB65		Q68B(*2)				ERNT-AQF8, ERNT-AQF5	352×240	790
			Q65B(*3) Q55B(*4)			ERNT-AQF5		
ERNT-AQB62				Q63B	Q52B(*5)	ERNT-AQF3	238×240	650
ERNT-AQB58		Q68B(*2)				ERNT-AQF8	411×240	870
ERNT-AQB55			Q65B(*3) Q55B(*4)			ERNT-AQF5	297×240	655
ERNT-AQB52					Q52B(*5)	ERNT-AQF3	183×240	505

4. Product Specifications

For detail specifications which do not appear in the specification comparison charts contained herein, see the user's manual supplied with the MELSEC-Q Series Module you use. Also, check that the specifications of the connected devices meet the specifications of the MELSEC-Q Series Module.

Conversion Adapter Model	Before replacement Module Model	No. of output points	After replacement MELSEC-Q Series Module Model	No. of modules	Conversion Adapter Weight (g)
ERNT-1Y2Q600	JAMSC-B2600	16	QY40P QY50	1	130

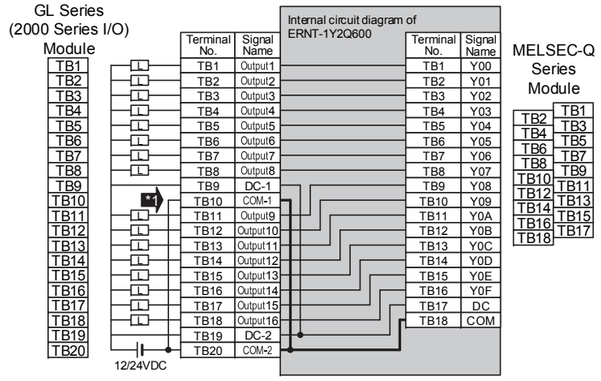

Precautions for wiring

*1 Because the switch concerned causes the number of points per common to change from 8 (two circuits) to 16 (one circuit), an alteration to the wiring is required if the commons on the existing modules have been used in separation from each other.

< Specification Comparison >

Specifications \ Model		MEMOCON-SC GL Series (2000 Series I/O)	MELSEC-Q Series	
		B2600 Sink type	QY40P Sink type	QY50 Sink type
No. of output points		16 points	16 points	16 points
Rated load voltage		12/24VDC	12/24VDC	12/24VDC
Maximum load current		2A/point, 5A/common	0.1A/point, 1.6A/common	0.5A/point, 4A/common
Maximum inrush current		7A, 10ms	0.7A, 10ms	4A, 10ms
Leaked current at OFF		0.2mA or less	0.1mA or less	0.1mA or less
Maximum voltage drop at ON		1.5VDC (MAX.)2A	0.2VDC (MAX.)0.1A	0.3VDC (MAX.)0.5A
Response time	OFF to ON	1ms or less	1ms or less	1ms or less
	ON to OFF	1ms or less (resistive load)	1ms or less (resistive load)	1ms or less (resistive load)
Surge suppressor		Varistor	Zener diode	Zener diode
Fuse		7.5A (unchangeable)	No	6.7A (unchangeable)
Isolation method		Photocoupler isolation	Photocoupler isolation	Photocoupler isolation
Common terminal arrangement		8 points/common	16 points/common	16 points/common
External connections		20-point terminal block	18-point terminal block	18-point terminal block

Make sure the ▭ section of the above table meets the specification of the machines and equipment connected to the MELSEC-Q Series Module.

5. Mounting and Installation

5.1 Handling Precautions

(1) Before attempting to install the Unit or carry out the necessary wiring, make certain that the external power supply, used in the system, is shut off on all three phases. Failure to do so may result in electric shock or damage to the product.
(2) Do not touch live terminals. There is a danger of electric shock or malfunction.
(3) Do not modify the Conversion Adapter or take it apart. Doing so will cause failure, malfunction, personal injury, or fire.
(4) Do not touch the energized part of the Conversion Adaptor directly. Contact will cause malfunction or failure in the system.
(5) Fasten the Conversion Adapter and the Mounting Bracket securely with retaining screws, and tighten the screws by applying torque within specified limits. Loose screws can lead to the dropping of the Conversion Adapter, or Mounting Bracket, possibly causing breakage thereof. Excessive tightness of the screws can lead to breakage of the screws, Converter Adaptor, Mounting Bracket, or MELSEC-Q Series Module, possibly causing the dropping, shorting, and malfunction thereof.
(6) Use care to prevent foreign materials including cuttings and wiring debris from entering the Conversion Adapter or the MELSEC-Q Series Module. These will be cause for fire, failure or malfunction.
(7) Do not drop the Conversion Adapter and Mounting Bracket or do not give a strong impact to it. This will cause damage.

5.2 Use Precautions

Item	Use Precautions
Width dimension of module	Because the module is reduced in width dimension (37.3mm→27.4mm) and thus in area available for wiring, check dimensional data before installing the module. 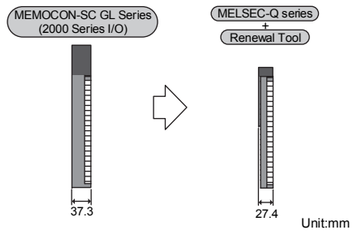
Depth dimension	The depth dimension required for installation is 132mm. Check the installation condition. 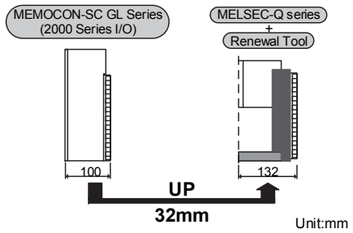 *The each depth dimension is measured from the panel surface. MEMOCON-SC GL Series (2000 Series I/O): Base Unit + Input/output Module + Terminal block, MELSEC-Q Series + Renewal Tool: Base Unit + Input/output Module + Conversion Adapter + Terminal block
Interference of the terminal block	When mounting either of the following Conversion Adapter on the right side of the Conversion Adapter leave one slot open between them or use the Q Series Large Type Base Unit (Q □ □ BL) manufactured by Mitsubishi Electric so that the Conversion Adapter does not interfere with the terminal block of the existing modules. Conversion Adapters : ERNT-1Y2Q500, ERNT-1JQ33S 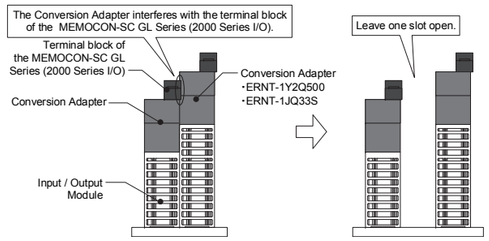

5.3 Installation Environment

The installation environment is the same as MELSEC-Q Series CPU Module to use. Refer to the user's manual of the MELSEC-Q Series CPU Module to be used.

6. Part Names and Installation Method

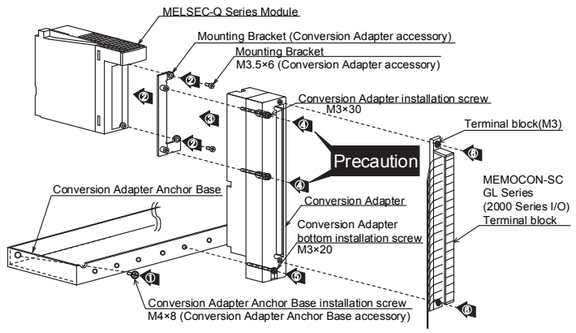

6.1 Installation Method

① Secure the Conversion Adapter Anchor Base to the Base Adapter or control panel using the Conversion Adapter Anchor Base installation screws (M4 × 8) provided as an accessory. (Two end locations)

② Remove the terminal block attached with the MELSEC-Q Series Module after loosening the terminal block installation screws (2 places top and bottom).

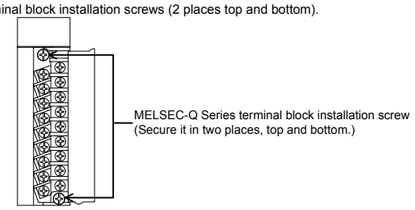

Secure the Mounting Bracket to the Q Series Module using the Mounting Bracket fixing screws [M3.5 × 6 (Conversion Adapter accessory); two upper/lower locations].

③ Mount the Conversion Adapter onto the Mounting Bracket.

④ Secure the Conversion Adapter using the Conversion Adapter installation screws (M3 × 30; 2 locations).

Precaution
Before tightening the installation screws, check that the Conversion Adapter has been securely installed on the MELSEC-Q Series Module. Tightening the screws in floating-off state or tilting state will damage the Conversion Adapter installation screws and the Mounting Bracket.

⑤ Secure the Conversion Adapter using the Conversion Adapter bottom installation screw (M3 × 20; 1 location).

⑥ Secure the terminal block of the MEMOCON-SC GL Series (2000 Series I/O) to the Conversion Adapter with the terminal block installation screws (M3; two upper/lower locations).

6.2 Tightening Torque

Tighten the installation screws to the specified torque below. An inappropriate tightening torque could cause the product to fall or result in a short circuit, product failure or malfunction.

Screw Location	Tightening Torque Range
Conversion Adapter Anchor Base installation screw (M4×8)	1.39 to 1.89N·m
Mounting Bracket fixing screw (M3.5×6)	0.68 to 0.92N·m
Conversion Adapter installation screw (M3×30)	0.43 to 0.57N·m
Conversion Adapter bottom installation screw (M3×20)	
Terminal block installation screw (M3)	0.5 to 0.6N·m

7. External Dimensions

Unit : mm

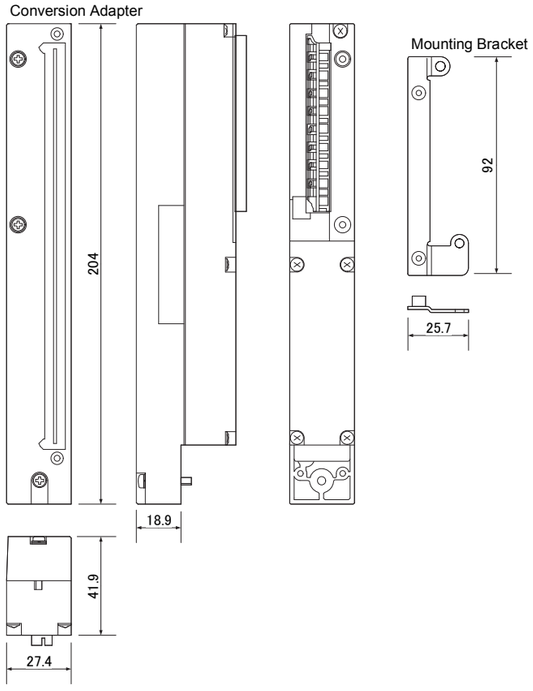

Duplication Prohibited
This manual may not be reproduced in any form, in part or in whole, without written permission from Mitsubishi Electric Engineering Company Limited.
©2016 MITSUBISHI ELECTRIC ENGINEERING COMPANY LIMITED ALL RIGHTS RESERVED

MELSEC is a registered trademark of Mitsubishi Electric Corporation.
MEMOCON is a registered trademark or a trademark of YASKAWA Electric Corporation.

Product Warranty Details

Please confirm the following product warranty details prior to product use.

Gratis Warranty Terms and Gratis Warranty Range

If any fault or defect (hereinafter referred to as “Failure”) attributable to Mitsubishi Electric Engineering Company Limited (hereinafter referred to as “MEE”) should occur within the gratis warranty period, MEE shall repair the product free of charge via the distributor from whom you made your purchase.

Gratis Warranty Period
The gratis warranty period of this product shall be one (1) year from the date of purchase or delivery to the designated place.
Note that after manufacture and shipment from MEE, the maximum distribution period shall be six (6) months, and the gratis warranty period after manufacturing shall be limited to eighteen (18) months.
In addition, the gratis warranty period for repaired products shall not exceed the gratis warranty period established prior to repair.

Gratis Warranty Range
The gratis warranty range shall be limited to normal use based on the usage conditions, methods and environment, etc., defined by the terms and precautions, etc., given in the instruction manual, user’s manual and caution labels on the product.

Warranty Period after Discontinuation of Production

(1) MEE shall offer product repair services (fee applied) for seven (7) years after production of the product has been discontinued. Discontinuation of production shall be reported via distributors.
(2) Product supply (including spare parts) is not possible after production has been discontinued.

Exclusion of Opportunity Loss and Secondary Loss from Warranty Liability

Regardless of the gratis warranty period, MEE shall not be liable for compensation for damages arising from causes not attributable to MEE, opportunity losses or lost profits incurred by the user due to Failures of MEE products, damages or secondary damages arising from special circumstances, whether foreseen or unforeseen by MEE, compensation for accidents, compensation for damages to products other than MEE products, or compensation for other work carried out by the user.

Changes in Product Specifications

The specifications given in the catalogs, manuals and technical documents are subject to change without notice.

This document is a new publication, effective November 2016. Specifications are subject to change without notice.

Developed November 2016
50CM-D180253-B